Universal series RF Receiver

09.009CS.04007

Important: *Read All Instructions Prior to Installation*

Function introduction

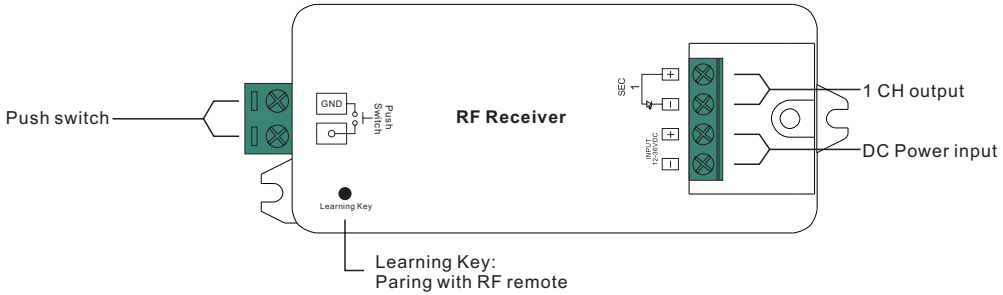

Product Data

No.	Input Voltage	Output Current	Output Power	Remarks	Size(LxWxH)
1	12-36VDC	1x8A	1x(96-288)W	Constant voltage	95x37x20mm
2	12-36VDC	1x350mA	1x(4.2-12.6)W	Constant current	95x37x20mm
3	12-36VDC	1x700mA	1x(8.4-25.2)W	Constant current	95x37x20mm

- Radio Frequency : 868/915/434mhz
- Waterproof grade: IP20

Safety & Warnings

• DO NOT install with power applied to device.
• DO NOT expose the device to moisture.

Operation

Do wiring according to connection diagram.

Pair RF Receiver with RF remote:

1. Connect and wire up the RF receiver correctly, power on.
2. Turn on the remote, click the **"Learning Key"** button on receiver, immediately click a zone number to pair the receiver to the specified zone if the remote is a multi-zone controller (if it is a single zone remote, this step is unnecessary), then touch the color wheel or slider bar on the remote (if the remote does not have color wheel or slider bar, click or touch any keys), the connected led light on receiver flickers twice, which means well paired.

Note: one receiver can be paired with max 8 remote controls.

PUSH DIM:

When connected to Push Switch, click push switch for switch ON/OFF,hold push switch to dim up/down the brightness

Delete the pairing:

1. Wire up the RF receiver correctly, power on.
2. Hold down the **" Learning Key"** button on receiver for over 3 seconds until the connected led light on receiver flickers twice, which means well deleted.

Wiring Diagram

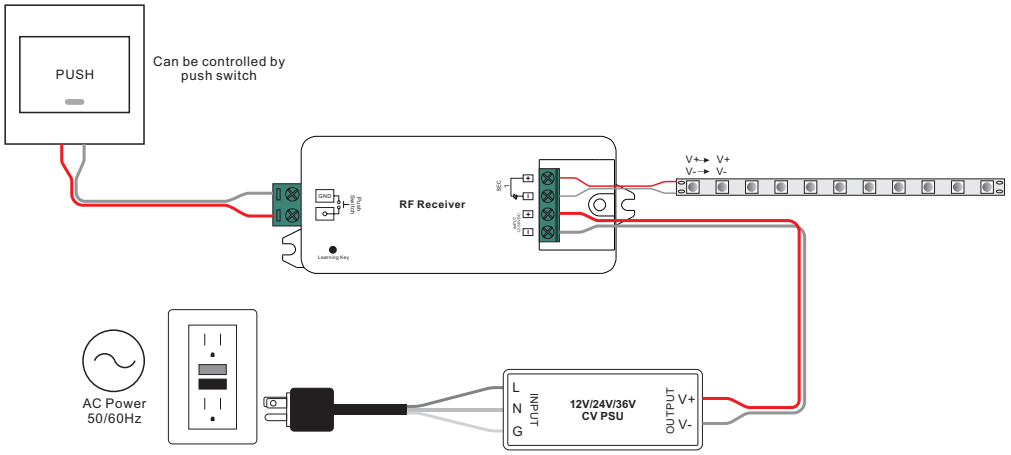

If you use multiple receivers, you have two choices:

Option 1: have all the receivers in the same zone, like zone 1

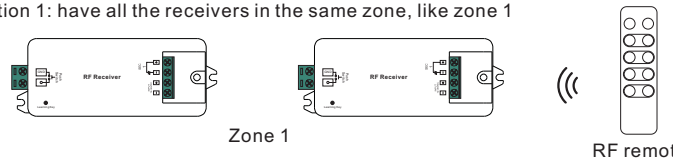
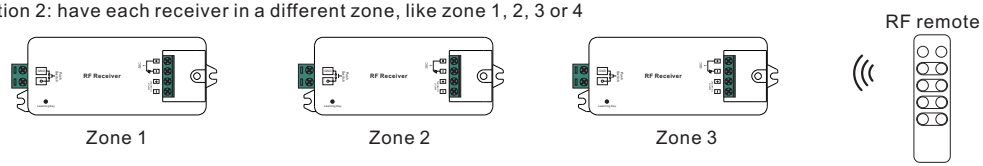
Option 2: have each receiver in a different zone, like zone 1, 2, 3 or 4